DATE DEC 08 2016	OUTLINE DIMENSIONS	MOTOR TYPE: AMRCNH-A01
CATALOG # VHP0404	3-PHASE INDUCTION MOTOR	FRAME NO. 324TP

Pole	HP	kW	Hz	VOLT	r/min(rpm)
4	40	29.8	60	230/460	1800

Ins	Rating	Dimension in	Approx Weight	Bearings
F	CONT.	inch	659 lbs	DE:6312C3 NDE: 7220B

NEMA Weather Protected TYPE I(WP I).Squirrel-cage Rotor.

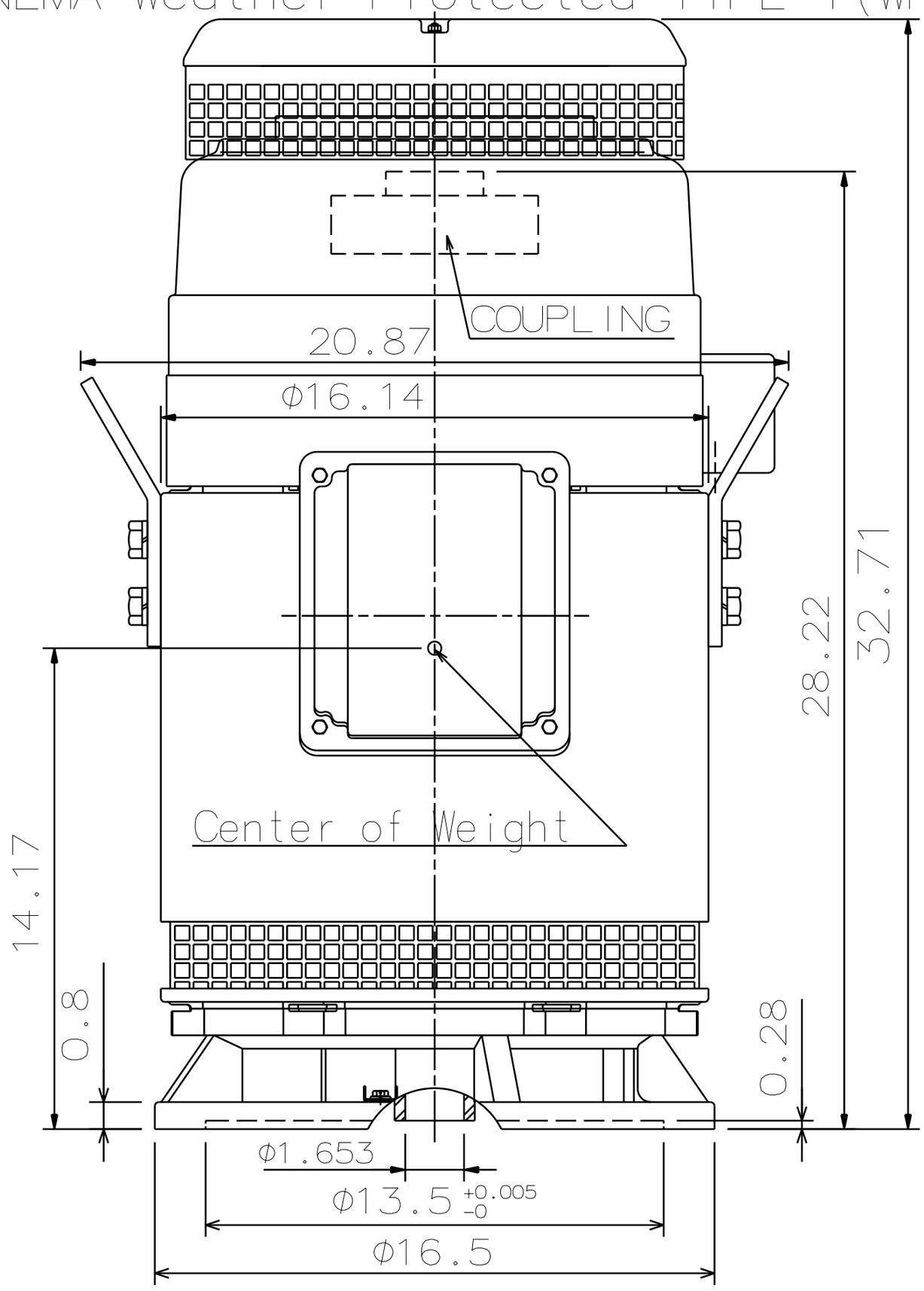

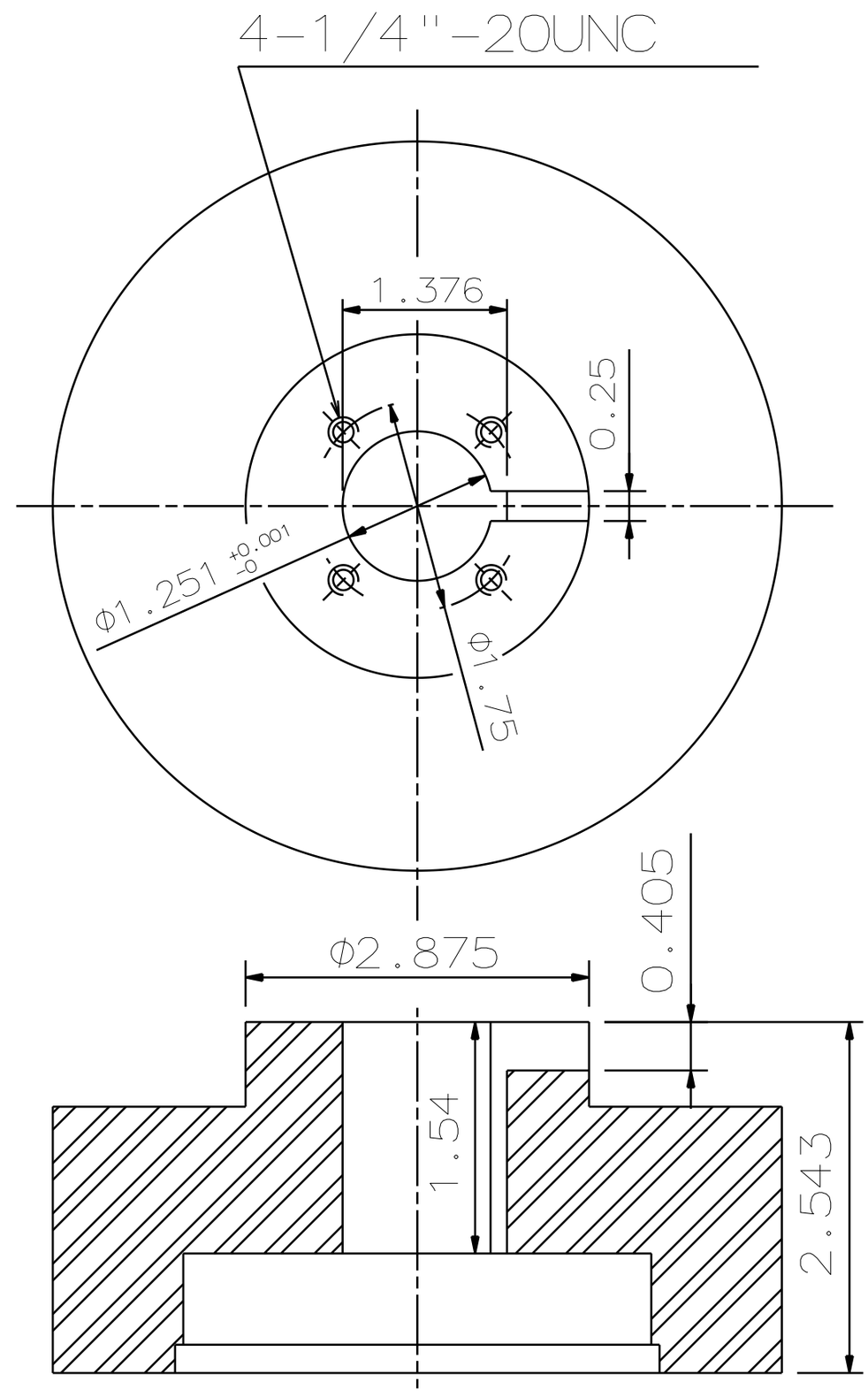

Coupling Dimension

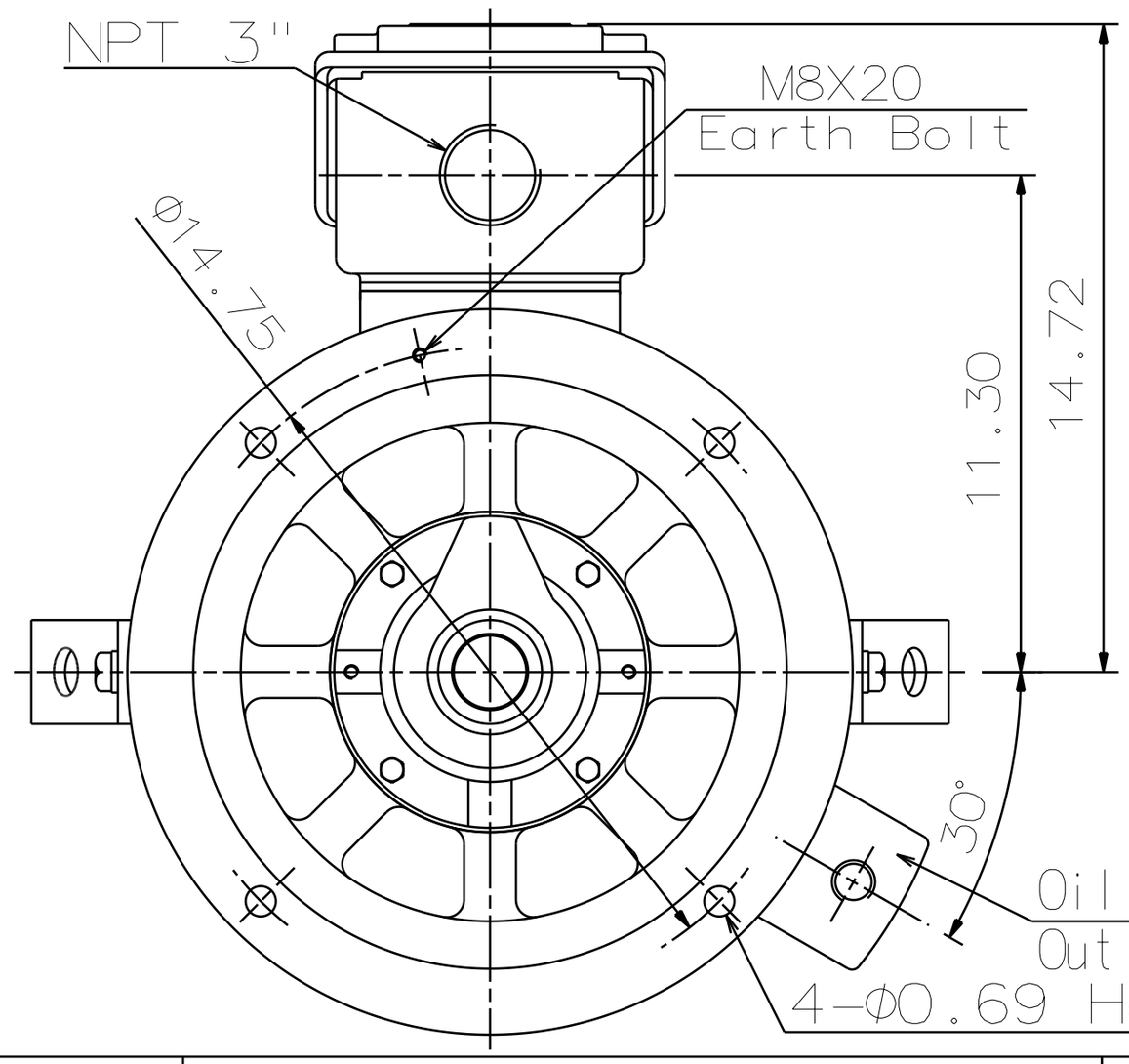

Note:

1. Downthrust:6000lbs.
   (L10-8800 hrs)
2. Rotation:C.C.W.
   (View from Top)
3. With Ball type N.R.R.
4. Approx Reed
   Frequencies:78.3Hz.
5. Upper Bearing(Oil lube)
   Kind of Oil:Turbine Oil
   -300SSU/100°F(ISO VG68)
   Quantity:0.27 Gallons

DWG.	K.L.KUO	04•20•11	TECO Westinghouse	DWG NO.
CHKD.	K.L.KUO	04•20•11		31057H809200
APPD.	M.C.TSAI	04•20•11		